# DESIGNATION EXAMPLE

Standard alloys

PLEASE REFER TO PAGE N°2

**TWA.8(60) - 200(100) - 310**

Anchor type | Diametre D | Angle α | Length L | Step S | Alloy

# TWA

**Ø6 T= 13**
**Ø8 T= 13**
**Ø10 T= 15**

**R = 4xØ**

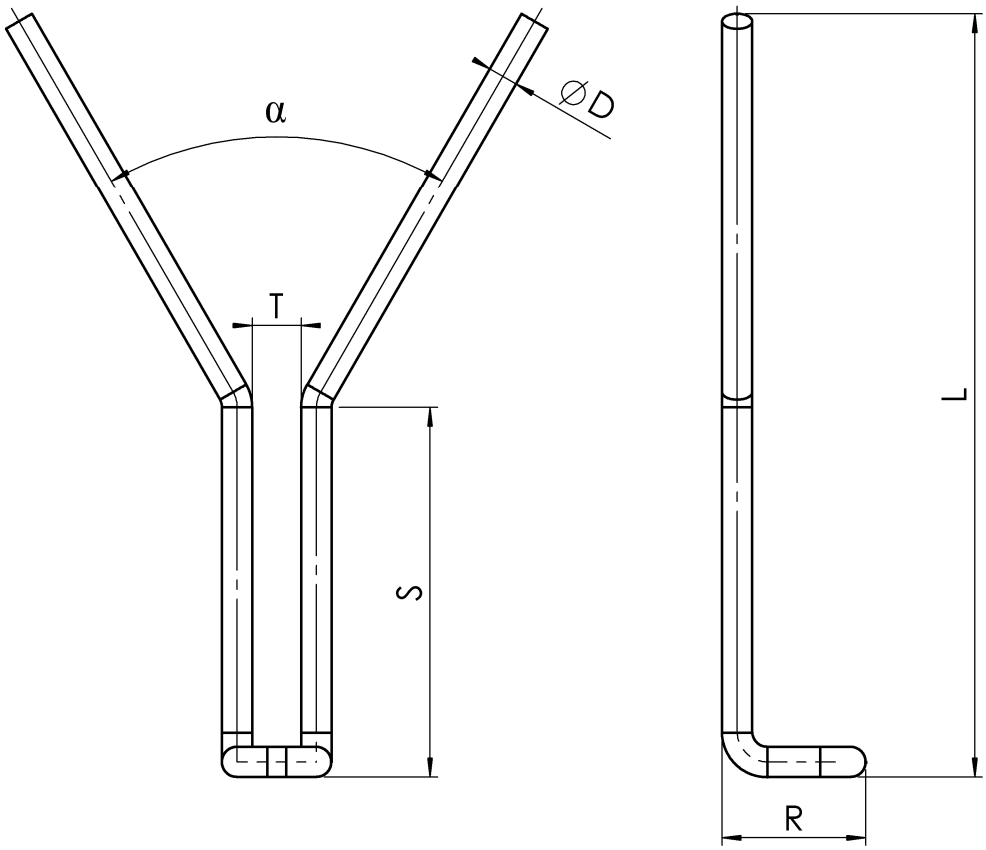


**IRIS - *Industrial Refractories & Insulating Specialities***

**Parc d'Activités Aérodrome Ouest - Rouvignies - F - 59328 VALENCIENNES Cedex (France)**

**Tél : +33 (0)3.27.21.52.80** **Fax : +33 (0)3.27.21.52.99**
**E-mail: contact@irisfrance.com** **Web: www.irisfrance.com**

This drawing is the property of IRIS. Unauthorised use of patented features and/or reproduction of this drawing is strictly prohibited

# ANCHOR TW

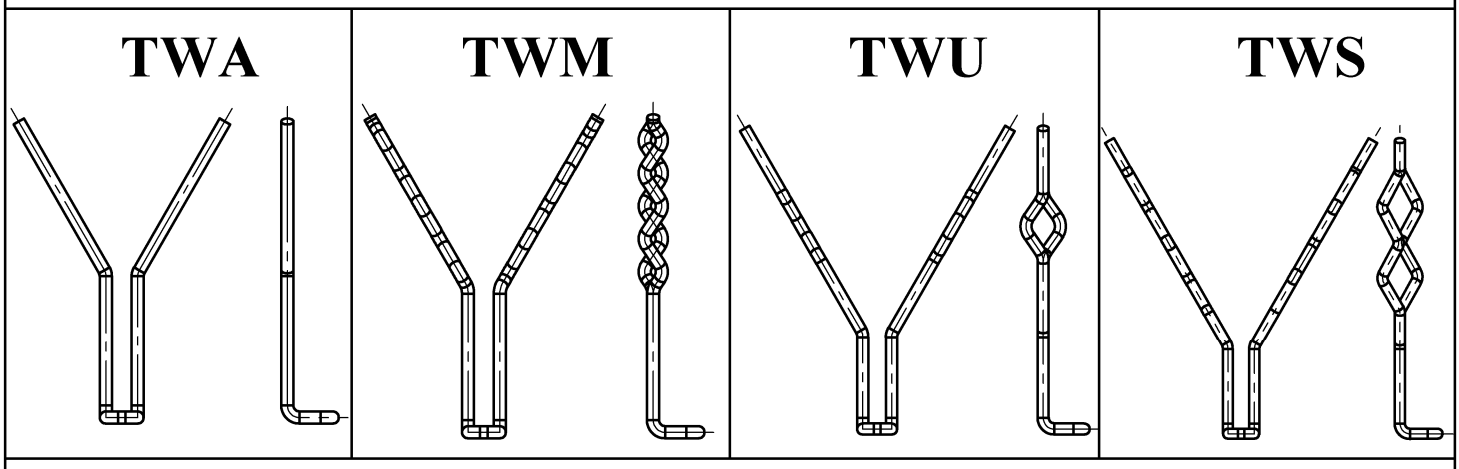


## Ex: TWA

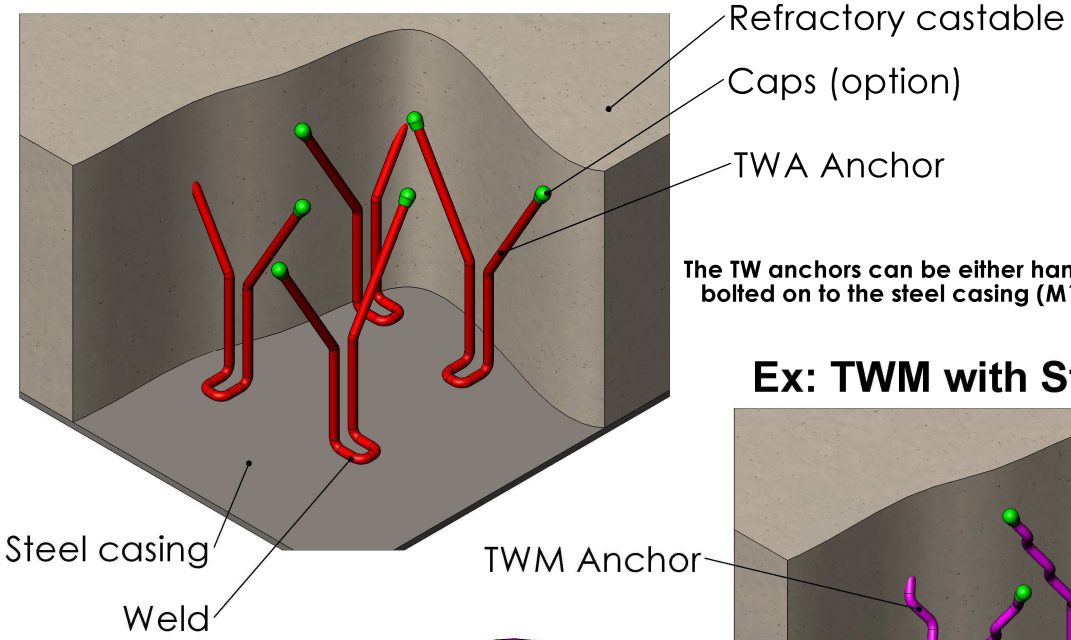


**The TW anchors can be either hand welded with electrode or bolted on to the steel casing (M10 recommanded or M12)**

## Ex: TWM with Stud

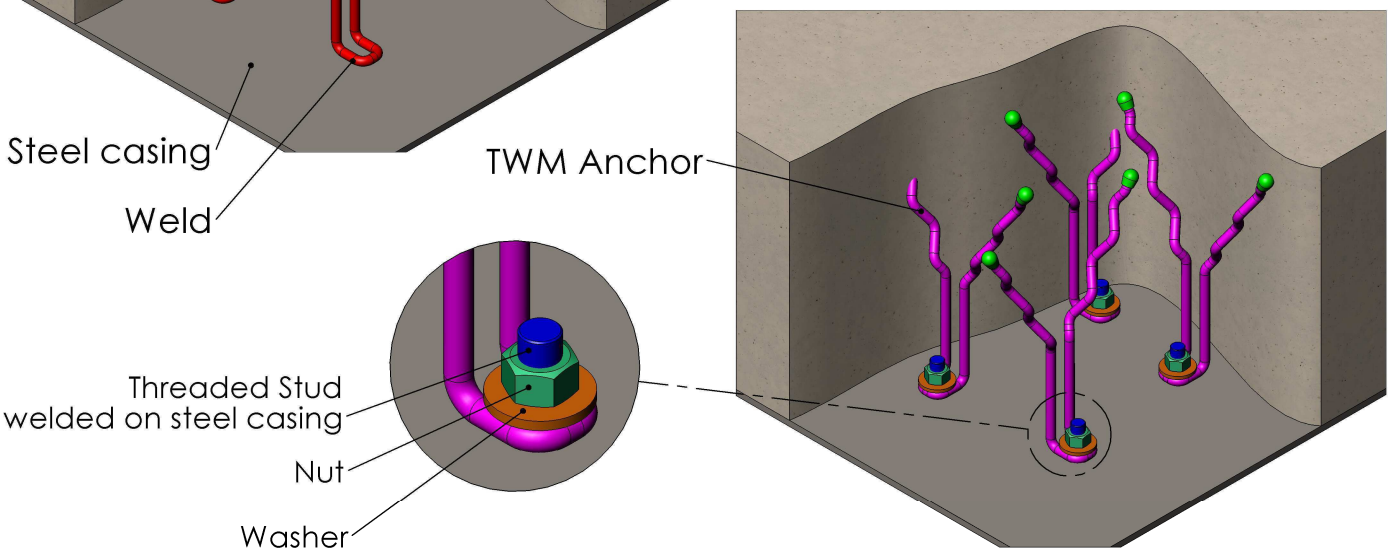


IRIS produces anchors from cold drawn wires,annealed before wiredrawing, with a tensile strength between 700 and 900 N/mm2.
IRIS produces anchors with a soft bending technology through robots operating hydraulic tools.
This technology allows to reduce mechanical stress inside the steel struture, to limit the formation of marks and cracks in which corrosions can start rapidly and generate drastic problem for the lining.

**IRIS - *Industrial Refractories & Insulating Specialities***

**Parc d'Activités Aérodrome Ouest - Rouvignies - F - 59328 VALENCIENNES Cedex (France)**

**Tél : +33 (0)3.27.21.52.80** **Fax : +33 (0)3.27.21.52.99**
**E-mail: contact@irisfrance.com** **Web: www.irisfrance.com**

This drawing is the property of IRIS. Unauthorised use of patented features and/or reproduction of this drawing is strictly prohibited